230.2300 - Tub Spout With Holder Installation

Installation Manual

FLUSSO

LUXURY PLUMBING FIXTURES

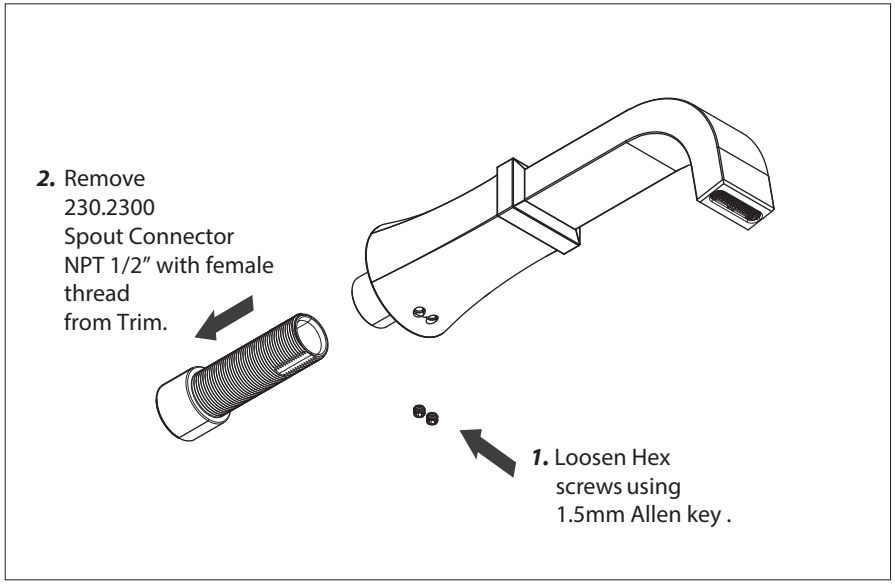

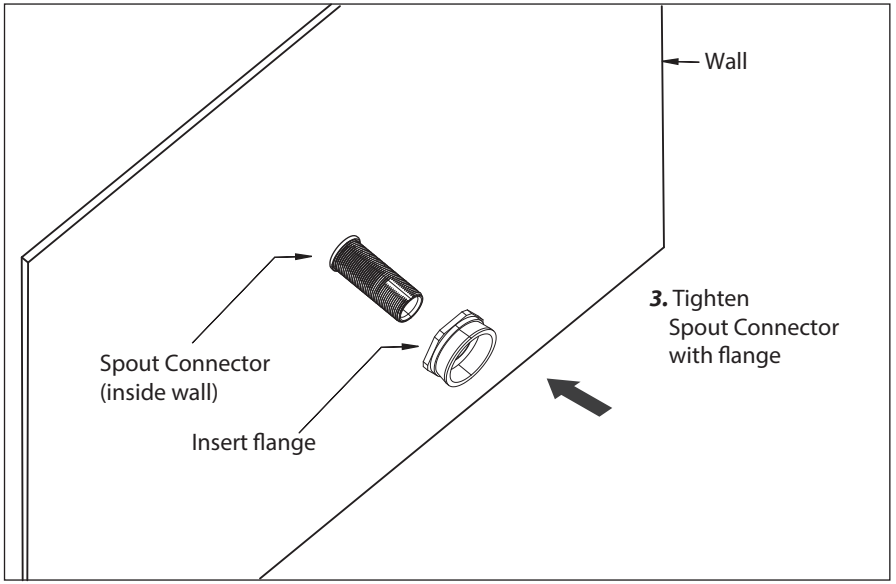

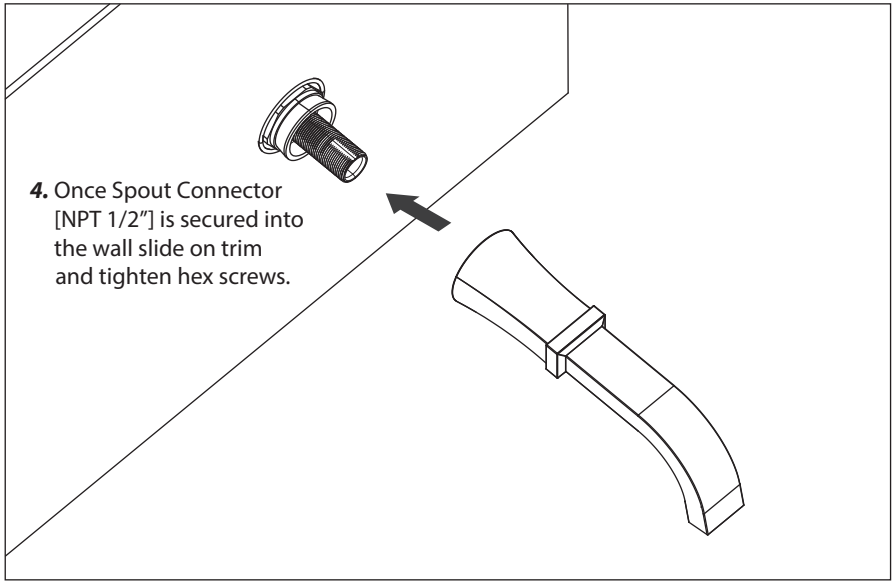

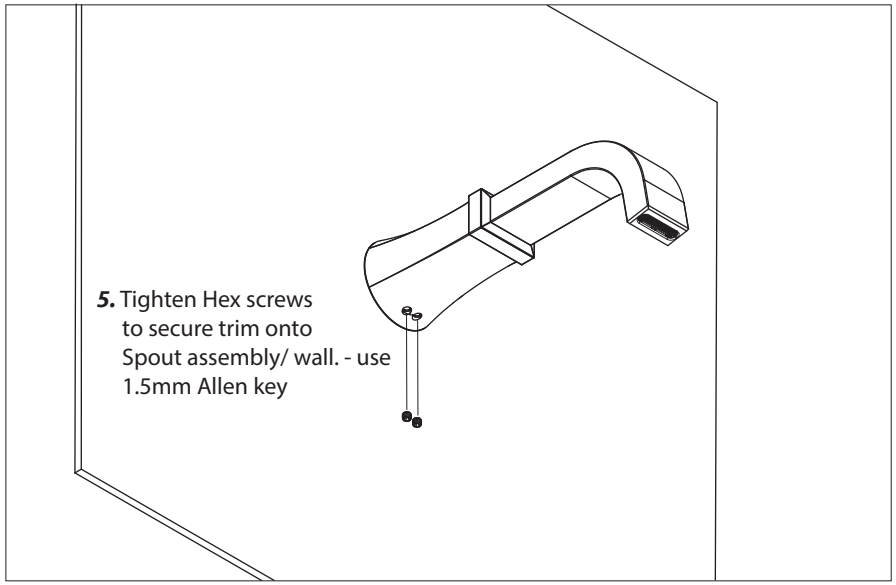

Ver 2.54