HS8042- Wall Elbow With Holder Installation
Installation Manual

isenberg® LUXURY PLUMBING FIXTURES by FLUSSO

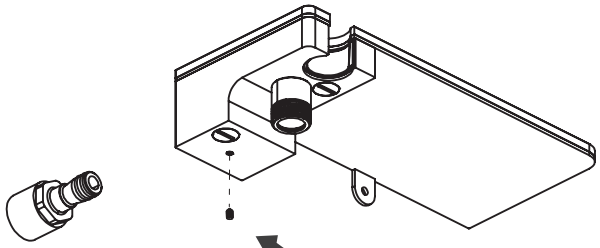

1. Loosen Hex screws using 1.5mm allen key

2. Remove female slide on connector [FEM.5505] from trim

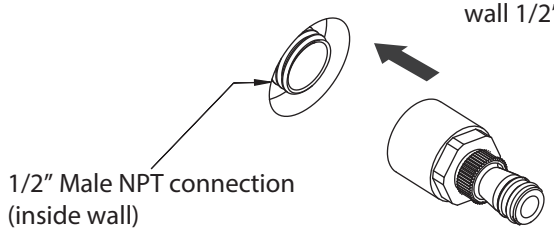

3. Tighten FEM.5505 into wall 1/2" male connector

1/2" Male NPT connection (inside wall)

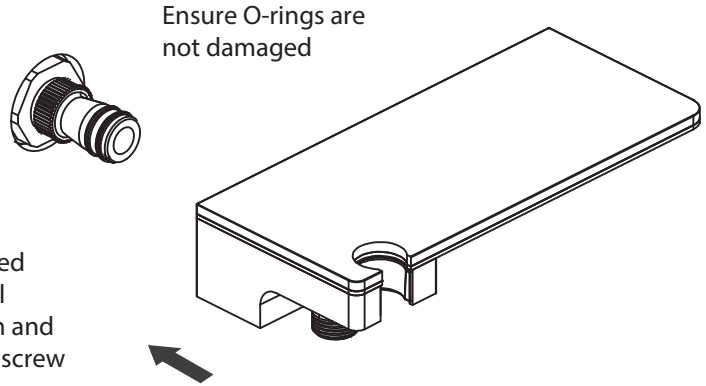

Ensure O-rings are not damaged

4. Once secured into the wall slide on trim and tighten hex screw

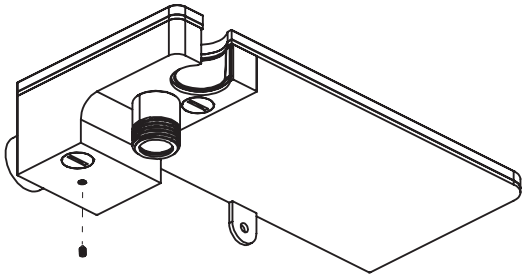

5. Tighten Hex screw to secure trim onto FEM.5505 / wall.
- use 1.5mm Allen key

Ver 2.53