SHS.1038- Hand Shower with Shower Shelf Thingy and Elbow Holder
Installation Manual

FLUSSO
LUXURY PLUMBING FIXTURES

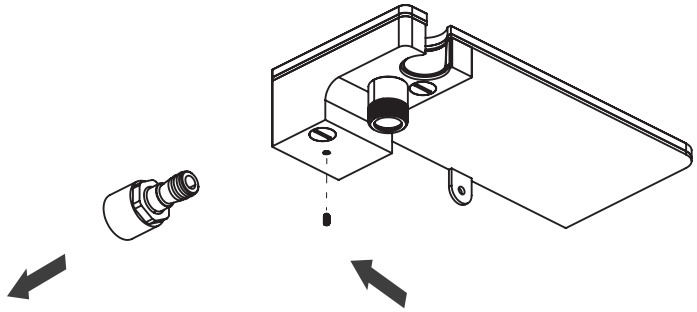

2. Remove female slide on connector [FEM.5505] from trim

1. Loosen Hex screws using 1.5mm allen key

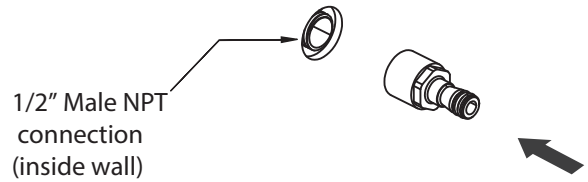

3. Tighten FEM.5505 into wall 1/2" male connector

4. "Secure it to the wall, attach the trim, tighten the hex screw, and install the hand shower and hose pipe."

Ensure O-rings are not damaged

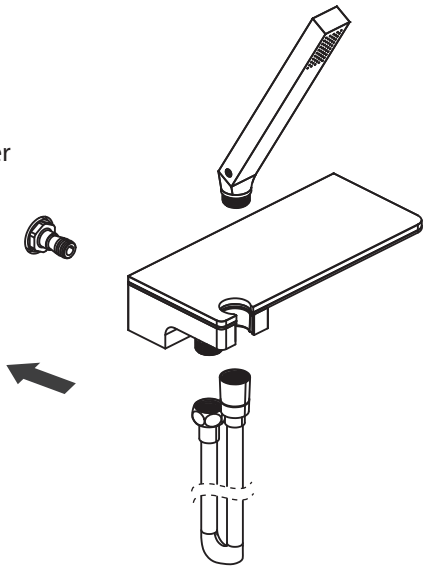

5. "Use a 1.5mm Allen key to tighten the hex screw and secure the trim to FEM.5505 or the wall. Attach the elbow holder to the wall using a screw."

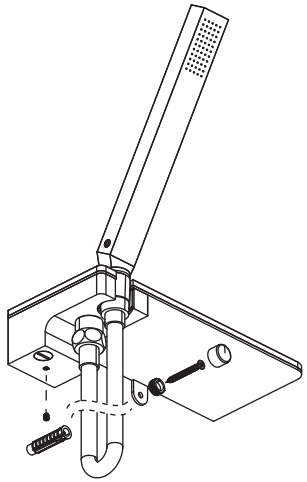

Ver 2.53