Product Parts Breakdown

▲ Specify Finish

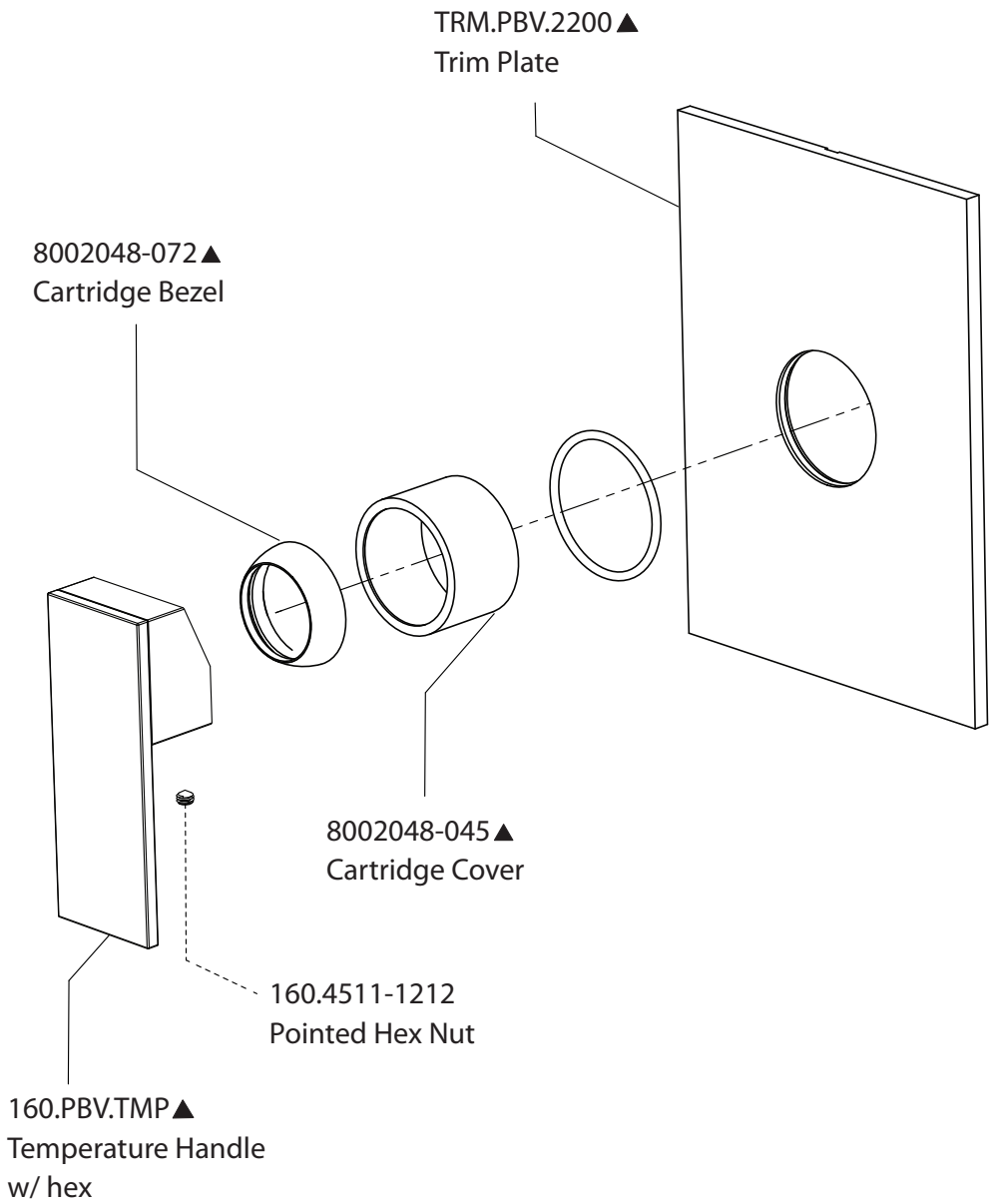

isenberg
innovation+design

160.2201T

Ver 2.56