260.2420CF | 5-Hole Deck Mounted Cascade / Sheet Flow Roman Tub Filler

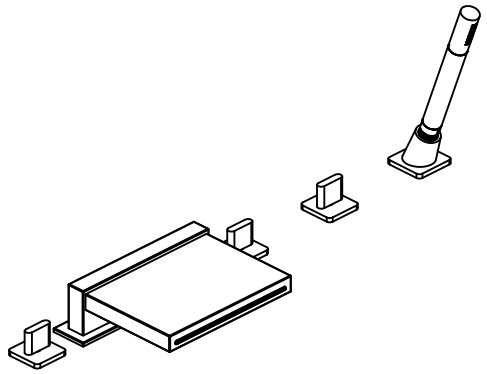

SPECIFICATIONS:

- Solid Brass construction - includes valves DKM.2420
- Spout Projection = 6.1″
- Flow Rate = 8 GPM
- Hand Shower Flow Rate = 1.8 GPM @ 60 PSI w/ back flow prevention
- 1/2″ NPT Connection
- Diverter handle controls water flow between spout and hand held

STANDARDS:

- ASME A112.18.1 / CSA B125.1
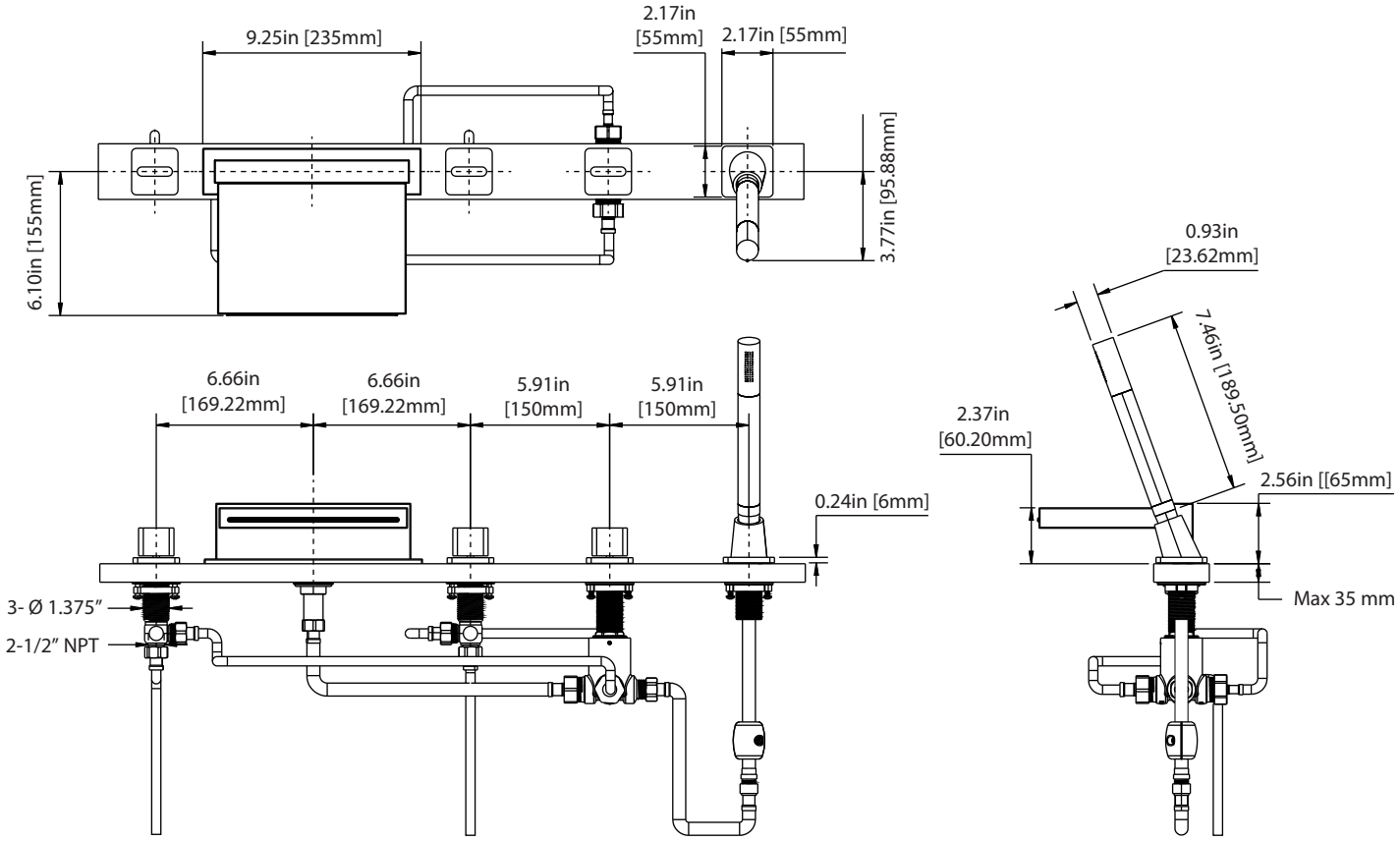
Technical Diagram